techoLED

BPE-021 Series Installation Instructions

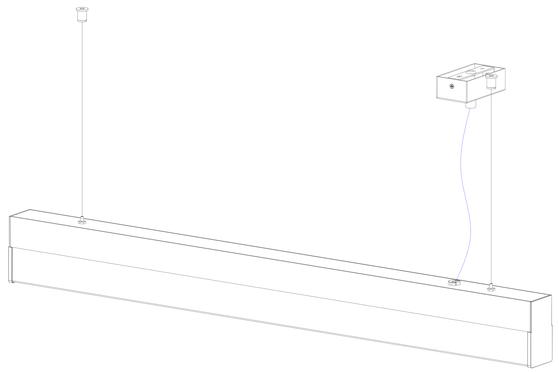

1.

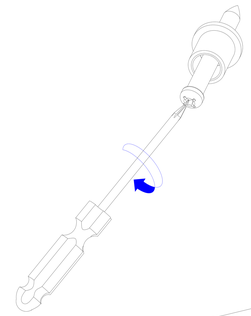

2.

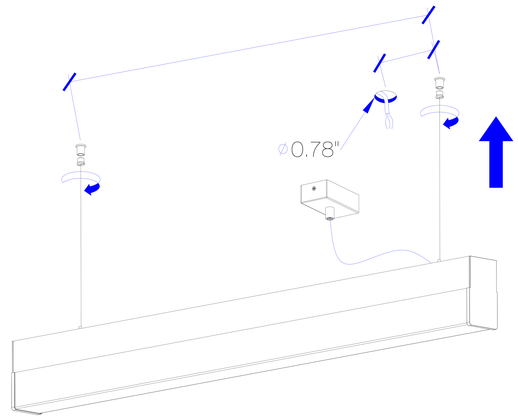

3.

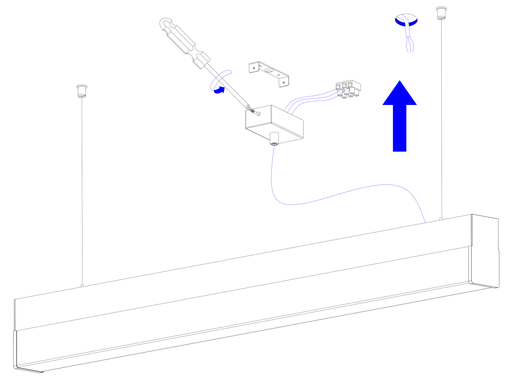

4.

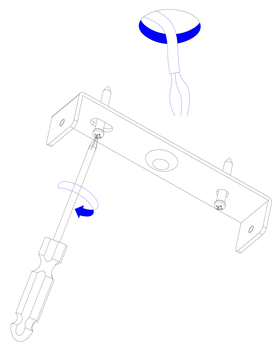

5.

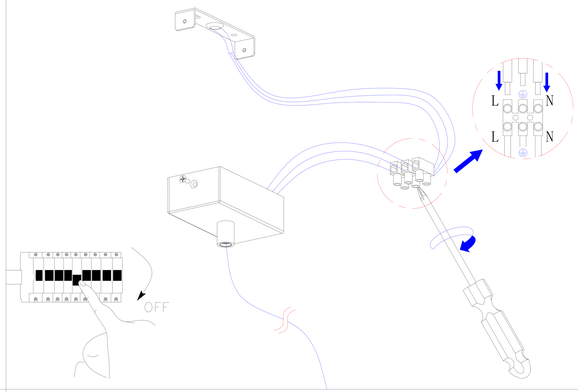

6.

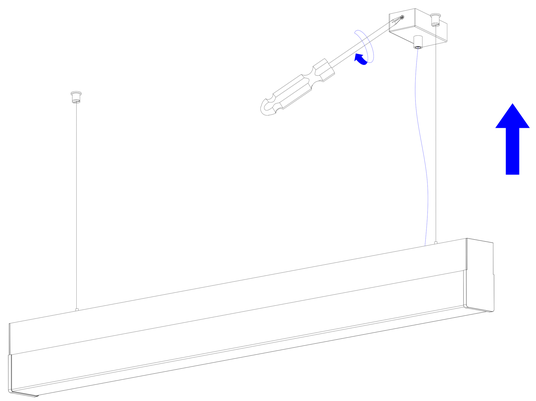
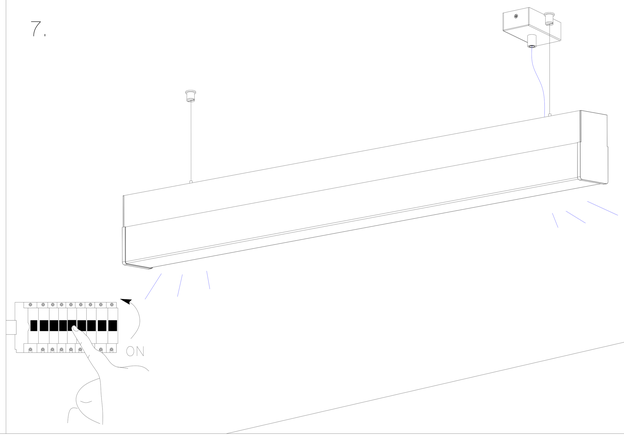
7.