techoLED

BPE-011
Installation Instructions

FY-003

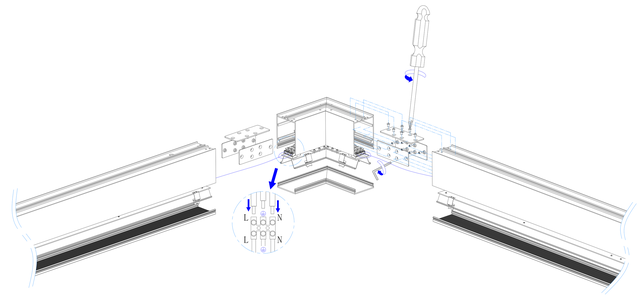

FY-004

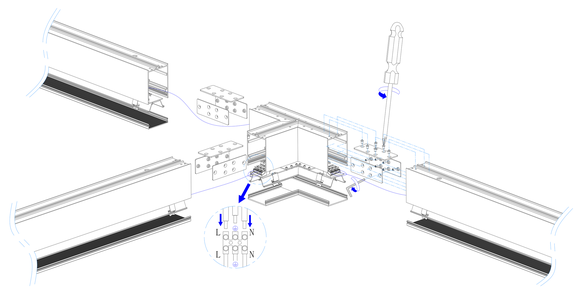

FY-005

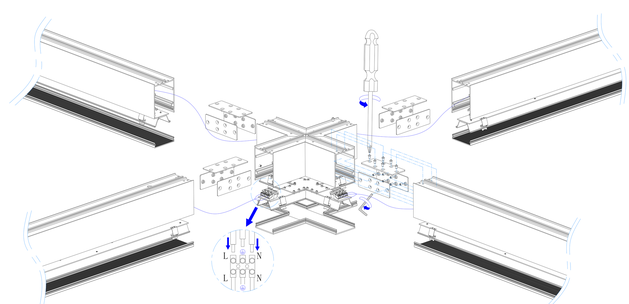

techoLED

BPE-011 Series Installation Instructions

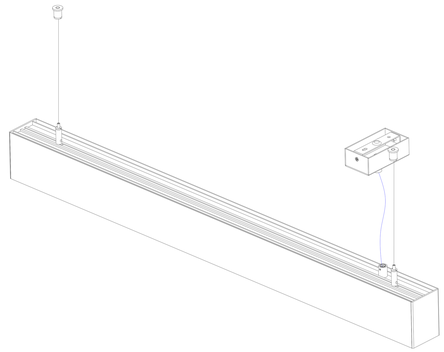

1.

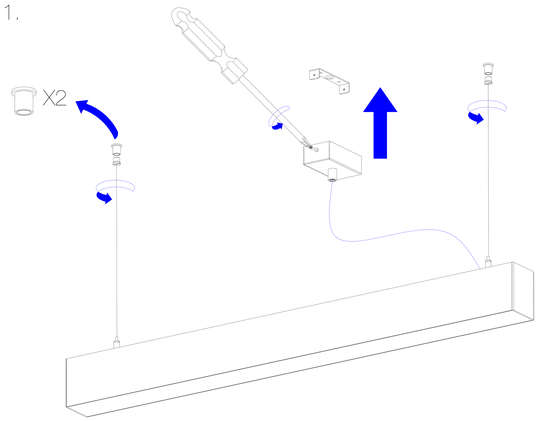

2.

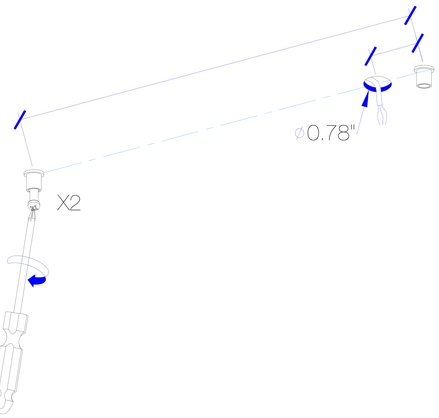

3.

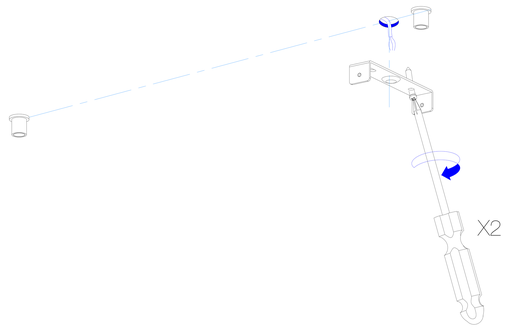

4.

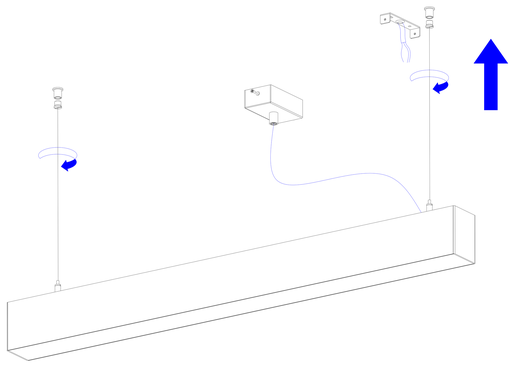

5.

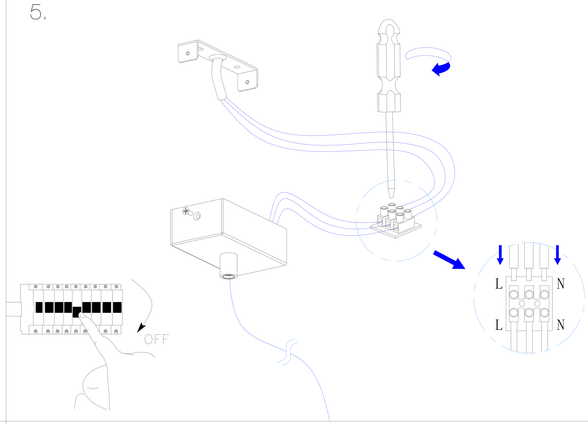

6.

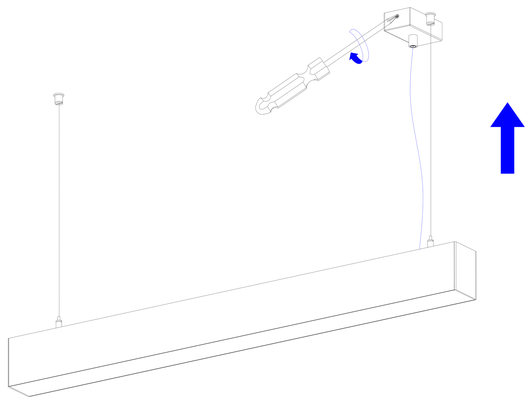
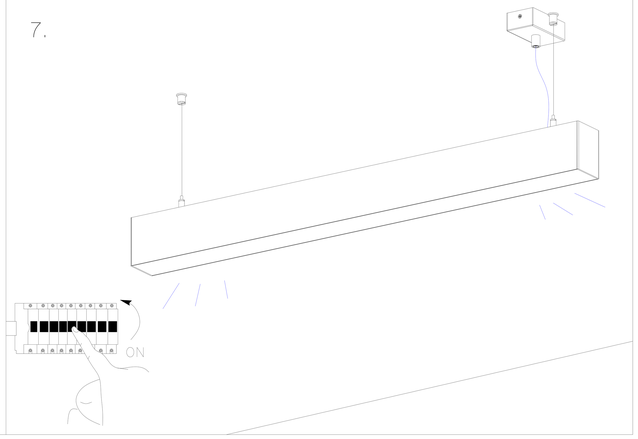
7.